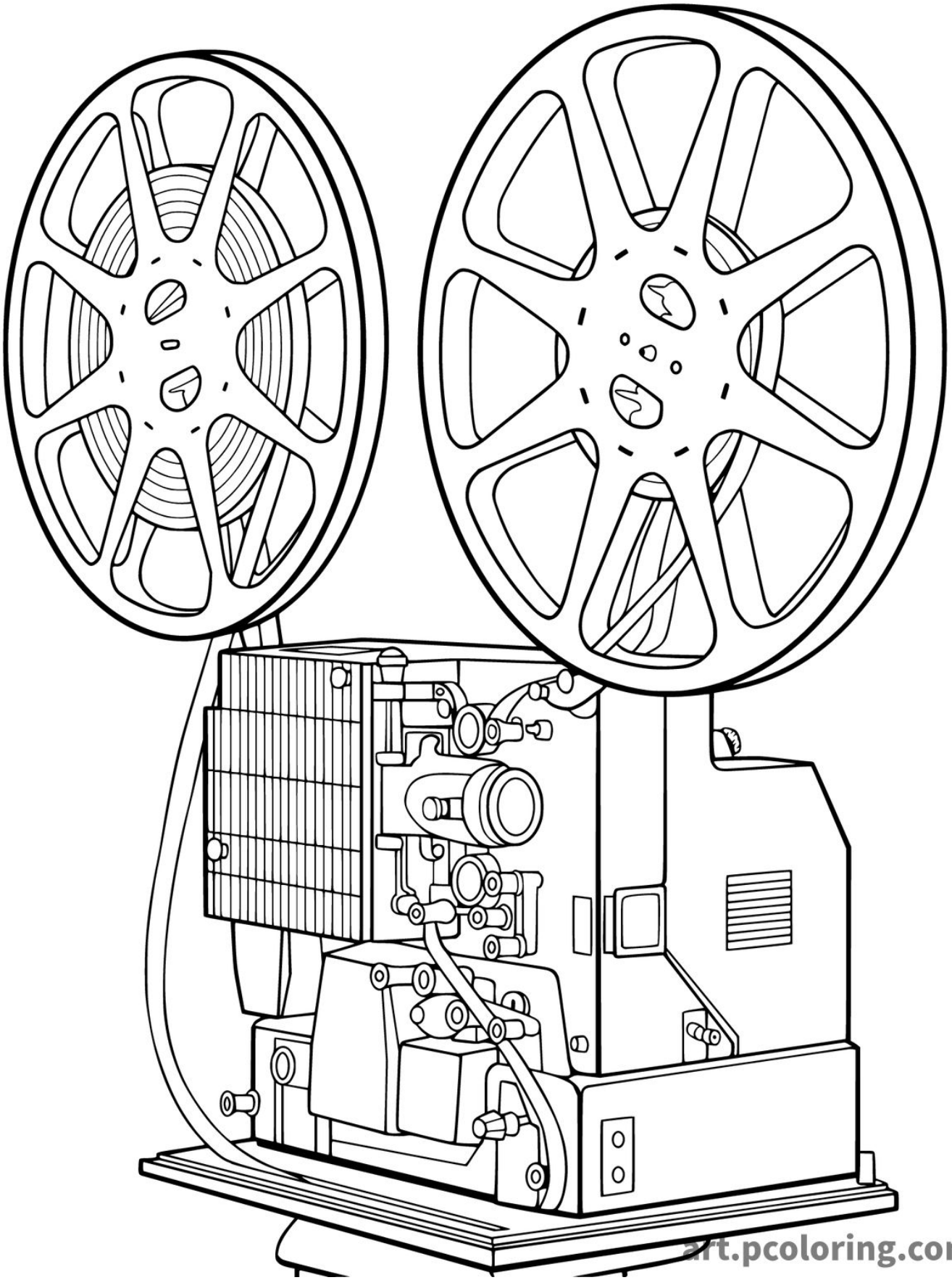

art.pcoloring.com